DWG.# 38060343 REV. 0

NOTES:
FOR CSA UNITS ONLY:
1 ALL BRANCH CIRCUIT BREAKERS MUST BE 15A
2 FRONT & REAR A/C BREAKERS REMAIN 20A.
3 INVERTER MAIN REMAINS 30A. INTERNAL BRKR'S NEED TO BE 15A.
4 USE CSA APPROVED WIRE

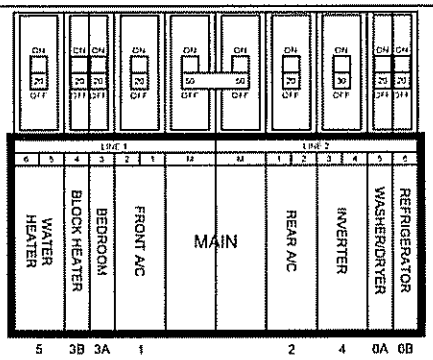


*INV 1 20A BATH(GFCI), KITCHEN, BEDROOM RECEPTS, REAR TV. REFER, LL, PATIO. FRONT TV VCR / DSS. COMPUTER
*INV 2 20A MICROWAVE

*NOTE: THESE ARE OUTPUTS FROM THE INVERTER.

| REV. | UNIT | DESCRIPTION OF CHANGE | BY | DATE |
|---|---|---|---|---|
| 0 | | RELEASED AS PROTOTYPE FOR 2006 MODEL YEAR. | JGA | 12/07/04 |

| DESCRIPTION | SYMBOL |
|---|---|
| 1 GENERATOR | |
| 2 50-AMP BREAKER BOX | |
| 3 50 AMP POWER CORD | |
| 4 RECEPT. DOUBLE (WHITE) | |
| 5 RECEPT. GFI (WHITE) | |
| 6 50-AMP TRANSFER SWITCH | TS50 |
| 7 RECEPT. SINGLE (WHITE) | |
| 8 INVERTER | I |
| 9 MICROWAVE | M |

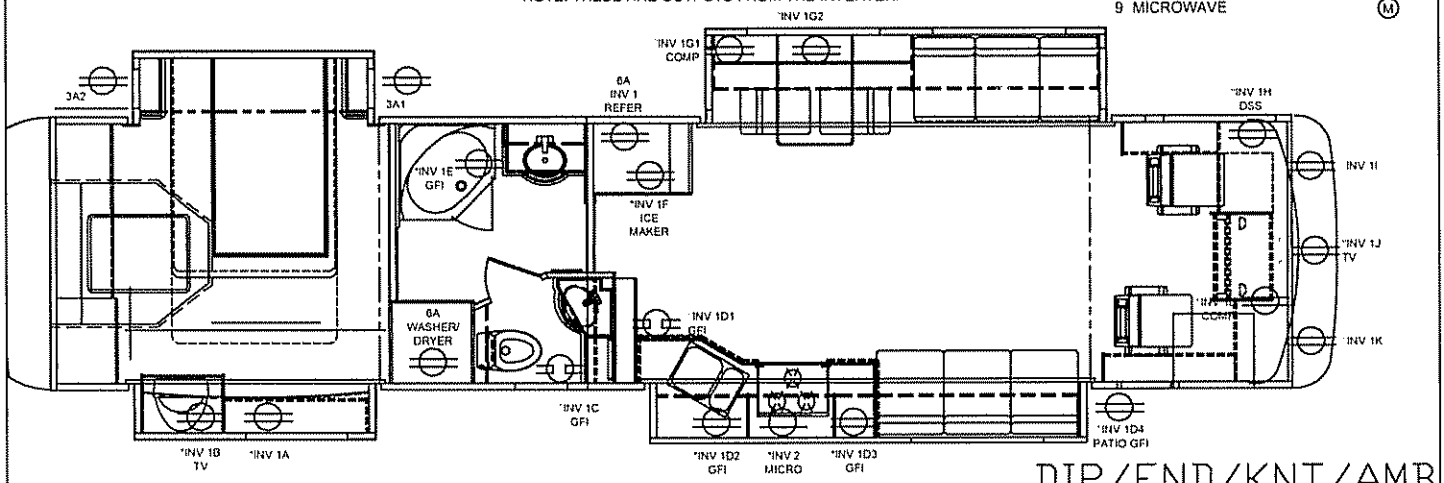


DIP/END/KNT/AMB

THE MONACO COACH CORP. AND ALL OF ITS SUBSIDIARIES CLAIMS PROPRIETARY RIGHTS IN THE MATERIAL HEREON. NEITHER THIS DRAWING NOR ANY REPRODUCTION THEREOF MAY BE USED TO MANUFACTURE ANYTHING WITHOUT PERMISSION IN WRITING FROM MONACO COACH CORP. OR ANY OF ITS SUBSIDIARIES TO THE USER SPECIFICALLY REFERRING TO THIS DRAWING.

DRAWN BY: JGA
DATE: 12/07/04
CHECKED BY:
UNLESS SPECIFIED DIMENSIONS ARE IN INCHES .XX ±.06 .XXX ±.030 ANGLES ONLY OR MOVED 0 ±30'
MONACO COACH CORP
HOLIDAY RAMBLER
DO NOT SCALE DRAWING
TITLE: CHART, 120 VOLT AC LIGHTING
SHEET 1 OF 1
SERIES: 40PDQ
DWG.# 38060343
REV. 0
AUTOCAD R14